Possible Nuclear Energy Related Collaborations with Fermilab, USA and IGCAR

1. Introduction

Project X is to be executed in Fermi lab- Fermi National Accelerator Laboratory (FNAL) near Chicago involves setting up of a new linear accelerator with super conducting cavities to achieve 3 GeV protons at 1 mA giving a steady beam power of 3 MW. Alternatively, 8 GeV pulsed beam and 10 mA current are targeted for kaon and muon based precision experiments and high energy neutrino physics. (Fig.1). Reference design consists of 3 GeV continuous wave (CW) Linac followed by 8 GeV pulsed Linac. Design report is to start in 2011 and construction targeted during 2016 -2021.

The aim is to produce and detect the three neutrinos (electron, muon and kaon), their masses and their probabilites of internal transformation. This requires setting up of large neutrino detector systems below ground level near (1 km) and away (840 km) locations from the accelerator. This will throw light on the present front line research on (a) unified field theory and particle physics (b) dark matter and dark energy in the universe etc. The accelerator can at the same time be used for ADS related studies for minor-actinide incineration which is a project in US now due to the closure of Yucca mountain project.

Fig.1 : Project X- Reference Design Configuration

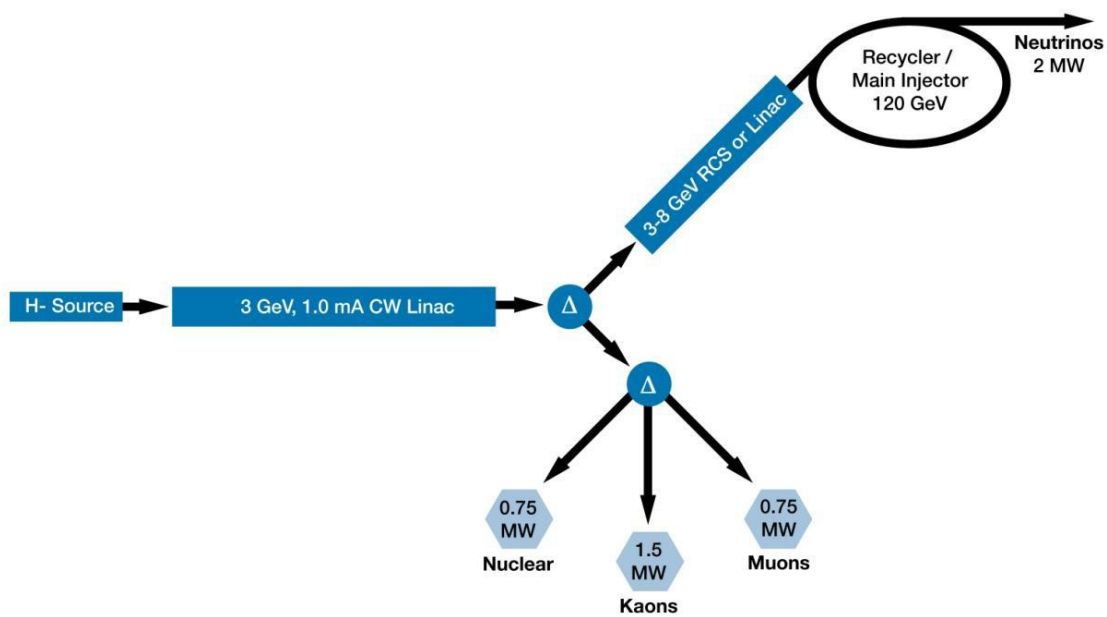

Two of the possible non-neutrino applications under consideration are nuclear physics and nuclear energy application – specifically accelerator based radio-active waste transmutation with 3 GeV protons.

Co-ordination committees and working groups have been constituted by Director's of FNAL and TIFR.

Co-ordination committee: US

1. Prof. Shekhar Mishra – Project X International Collaboration Co-ordinator
2. Dr. Robert Tschirhart – Project X Physics program
3. Dr. Robert Plunkett, Fermilab Neutrino program

Co-ordination committee: India

1. Dr. Amit Roy- IUAC
2. Dr. Shashi Dugad – TIFR
3. Dr. P.Mohanakrishnan - IGCAR

Working groups are in the areas of (a) neutrino physics (b) rare processes (c) nuclear physics (d) nuclear energy (e) detectors and electronics (f) particle physics and hyper-nuclei experiment. From IGCAR, Dr. B.K. Panigrahi represents nuclear energy – the corresponding US representative is Dr. Y.A.M. Gohar of ANL.

Prof. Shekhar Mishra visited IGCAR on 3 June 2011 and held discussions with scientists in IGCAR. He visited MSG and RCL and showed keen interest in the R&D being conducted. He pointed out that the collaborations can be initiated with existing facilities at FNAL before the Project-X collaboration.

2. Proposed Collaborations from IGCAR on Nuclear Energy

2.1 Material Science

Recent studies suggests that Project-X linac can be used as a technology demonstration project for nuclear energy application with a focus on demonstrating (1).Accelerator technology (2). Target technology (3). Material development for ADS systems. Radiation damage to the structural material limit the maximum power density in the target structure and the target lifetime. The structural material in ADSS conditions is exposed to a large flux of neutrons, helium and hydrogen. The total displacement damage is estimated to be ~68 dpa/fpy (full power year), and the helium and hydrogen production are ~ 1500 appm/fpy and ~ 28000 appm/fpy respectively. The maximum operating temperature of structural materials is 550-600 degree C depending on the choice of material. The main materials issues expected is liquid coolant corrosion, irradiation hardening, swelling and

irradiation creep. Void swelling is expected to be very high due to the large He/ dpa ratio. As IGCAR interested in high irradiation tolerant materials, these investigations are likely to aid in that search from the results of the experiments as well as their interpretation. Also the stability of oxide coating on structural material at these elevated temperature needs to be investigated in presence of the liquid metal and irradiation damage. The 3 GeV, 1 mA proton LINAC of FNAL will act as a test bed for the structural material performance including radiation damage and liquid metal effects. In addition these radiation environment may throw light on new materials physics which has not been encountered so far. Participation of IGCAR in this very advanced facility for fundamental studies will provide us know how in materials science and technology free from technology barrier.

2.2 Reactor Physics

Accelerators are increasingly used a research tool for producing neutrons which can then be used for variety of applications. When a fission reactor acting as a neutron source, the safety clearances required for experimentation considering the criticality aspects are very time consuming. As the accelerator shuts down without any chance of chain reaction, there is a advantage in using accelerator driven neutron source. It is of interest to investigate different target materials and their neutron production capabilities. Neutrons can be generated at required energies based on the carefully selected target.

Thus a collaboration in the area of neutron production and spectra of neutrons in different targets is of interest. These neutrons can be used for shielding experiments as performed in ORNL tower shielding facility. Measurement of heat generation in these targets is also important for getting basic data for target design.

India is interested in minor actinide incineration in the closed fuel cycle of FBR. But any experiments involving minor actinides irradiation is being planned some time in future. Thus the rate of incineration very long lived minor actinides or fission products in a given neutron spectrum as well as the corresponding heat generation is useful. Participation in minor actinide target experiments planned by FNAL. These experiments will be a valuable results and will be complementary to the experiments possible in FBR.

2.3 Nuclear Data

Measurement of neutron cross-sections for the following reactions are of interest. Most of these reactions are involved the MA burners (FBR as well as ADS). A few (first three quoted below) are of interest in Th utilization. Their available data through measurements and models have not reasonably converged, and so are of R&D interest. The nuclides are 91-Pa-231, 91-Pa-232, 92-U-234, 93-Np-238, 95-Am-241, 95-Am-242, 96-Cm-242 and 96-Cm-244.

Reactions:	(i)	(n, xn')	x = 1,2,3,4,. . . [Inelastic, (n,2n), (n,3n),. . . . .]
	(ii)	(n, yn f)	y = 0,1,2,. . . [1st chance, 2nd chance, … fissions]
	(iii)	(n, xc yn')	c = p, d, He^3, α [Charged particle + neutron production with associated multiplicities] x=1,2.. and y = 0,1,2,3.
		Energies:	0.1, 1, 5, 10, 15, 20, 30, 40, 50 MeV

2.4 Chemistry of Lead-Bi Liquid Alloy

Liquid lead and lead-bismuth eutectic (LBE) alloy are highly corrosive to structural steels due to the high solubility of the alloying elements of steels in them. However, the corrosion rate could be reduced significantly by controlling the dissolved oxygen in these liquid metals whereby a protective oxide layer is formed on the steel-liquid metal interface. While nickel free ferritic steels only are envisaged for use in high temperature systems containing these liquid metals, optimization of the composition of the steels and a detailed knowledge about the conditions needed for the formation of the protective oxide layer and their long term stability are necessary. For optimizing the composition of the steel, a comprehensive knowledge on the thermochemical bahaviour of the ternary Pb-M-O and Bi-M-O systems and long term compatibility of the candidates with the liquid metal coolants are essential. Since precise control of dissolved oxygen in the liquid metals is required for the formation and maintenance of the protective oxide layers, reliable and rugged oxygen sensors capable of operating in these heavy liquid metal coolant systems are also required. Collaboration in these areas would be mutually beneficial.

3. Collaboration in Using Existing Facilities

A DAE team is visiting FNAL soon to discuss the collaborations. There is no IGCAR team member. Dr. Purniah of DAE who is familiar with IGCAR R&D is a team member. He may be requested to specially look of existing FNAL facilities where the type of collaborations mentioned above can be initiated – before finally implementing them in Project-X.